TITLE. EXP VIEW DWG- Schwinn A40 Ellip MY13			
DRAWN E.MAURICE	DOC. PART NO.	PRODUCT SKU NO.	REV.
DATE 03/05/2013	100330-W	100330	C

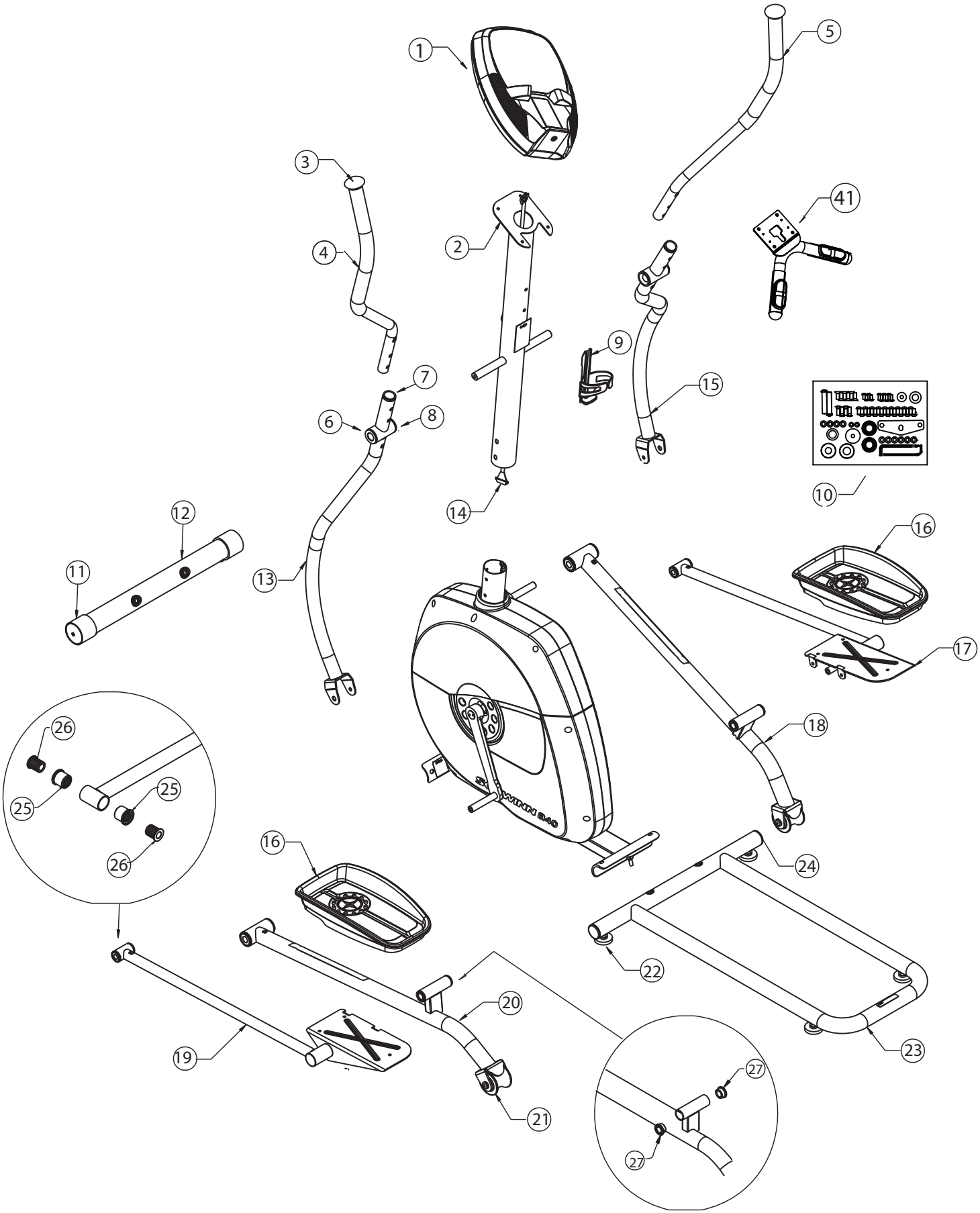

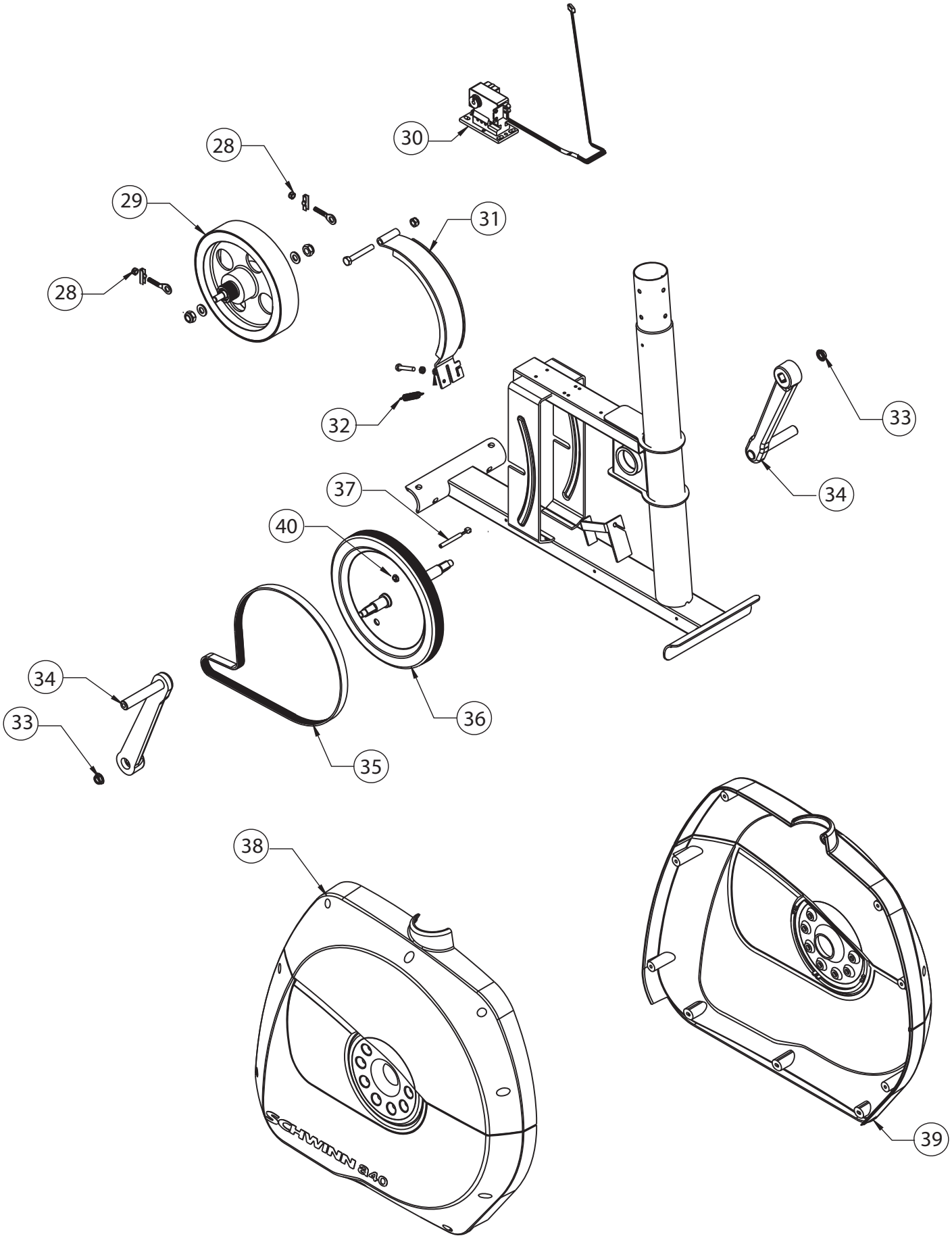
30
28
29
31
28
32
33
34
37
40
34
33
36
35
38
39
SCHWINN 840