TITLE.			
EXP VIEW DWG- BFX LX3 LATERAL TRAINER			
DRAWN J.MORGAN	DOC. PART NO.	PRODUCT SKU NO.	REV.
DATE 06/25/2018	100601-W	100601	F

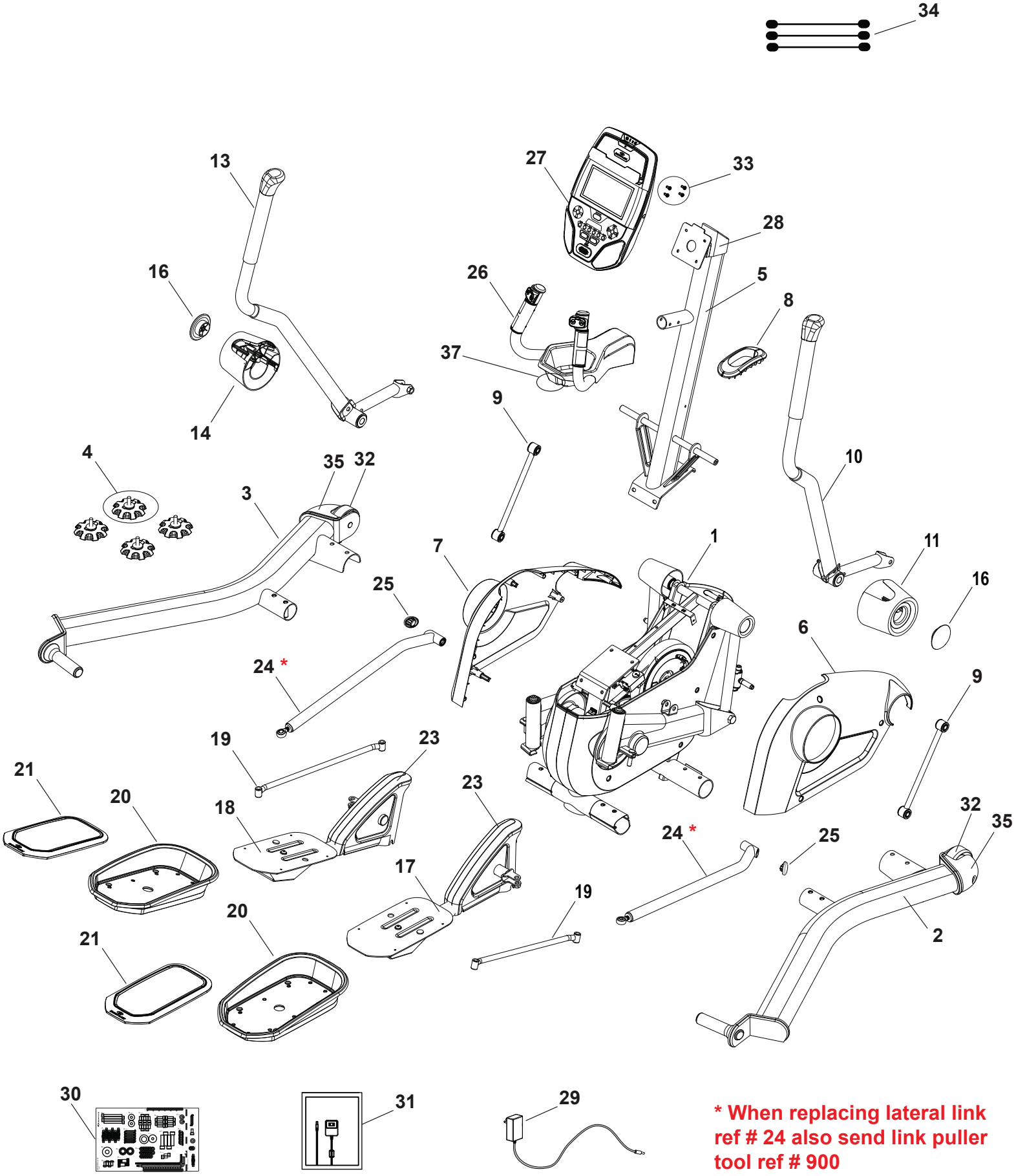

*** When replacing lateral link ref # 24 also send link puller tool ref # 900**

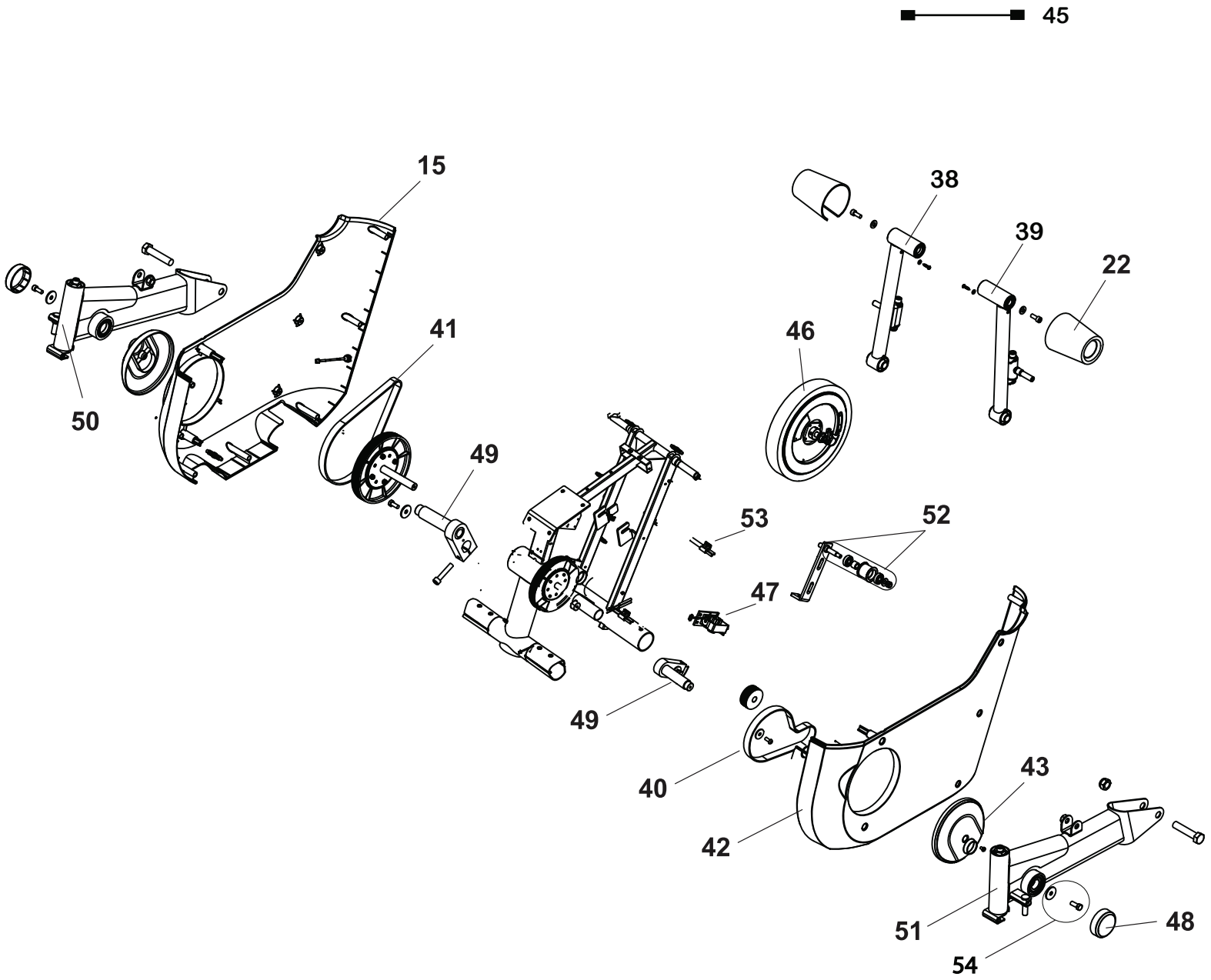
45
15
38
39
22
41
46
50
49
53
52
47
49
40
43
42
51
48
54