TITLE			
EXP VIEW DWG- SCHWINN 290 RECUMBENT BIKE			
DRAWN R. Peterson	DOC. PART NO. 100948-W	PRODUCT SKU NO. 100948	REV. E
DATE 1/13/2023			

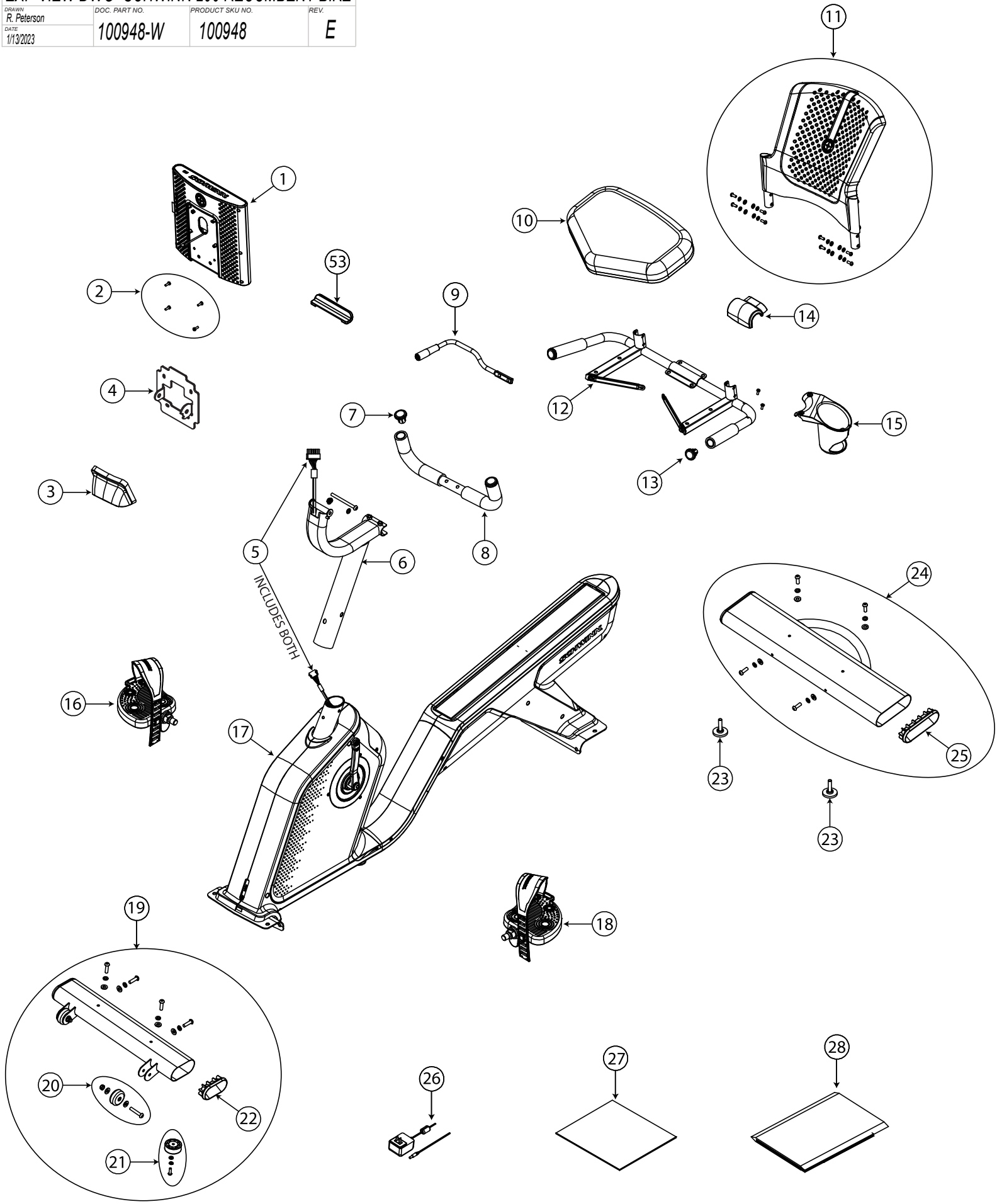

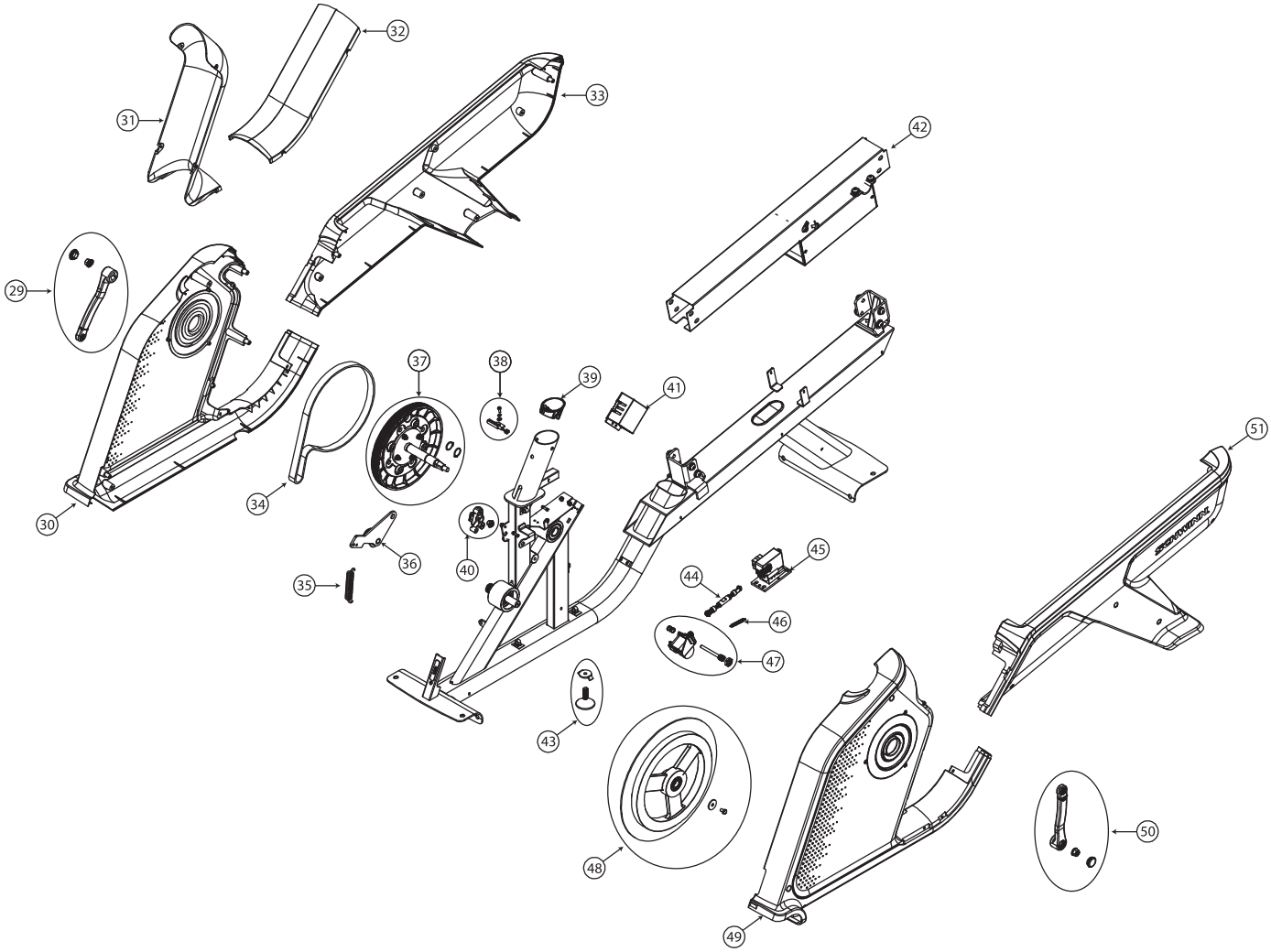
32
31
33
42
29
37
38
39
41
51
34
30
36
40
45
35
44
46
47
43
48
50
49

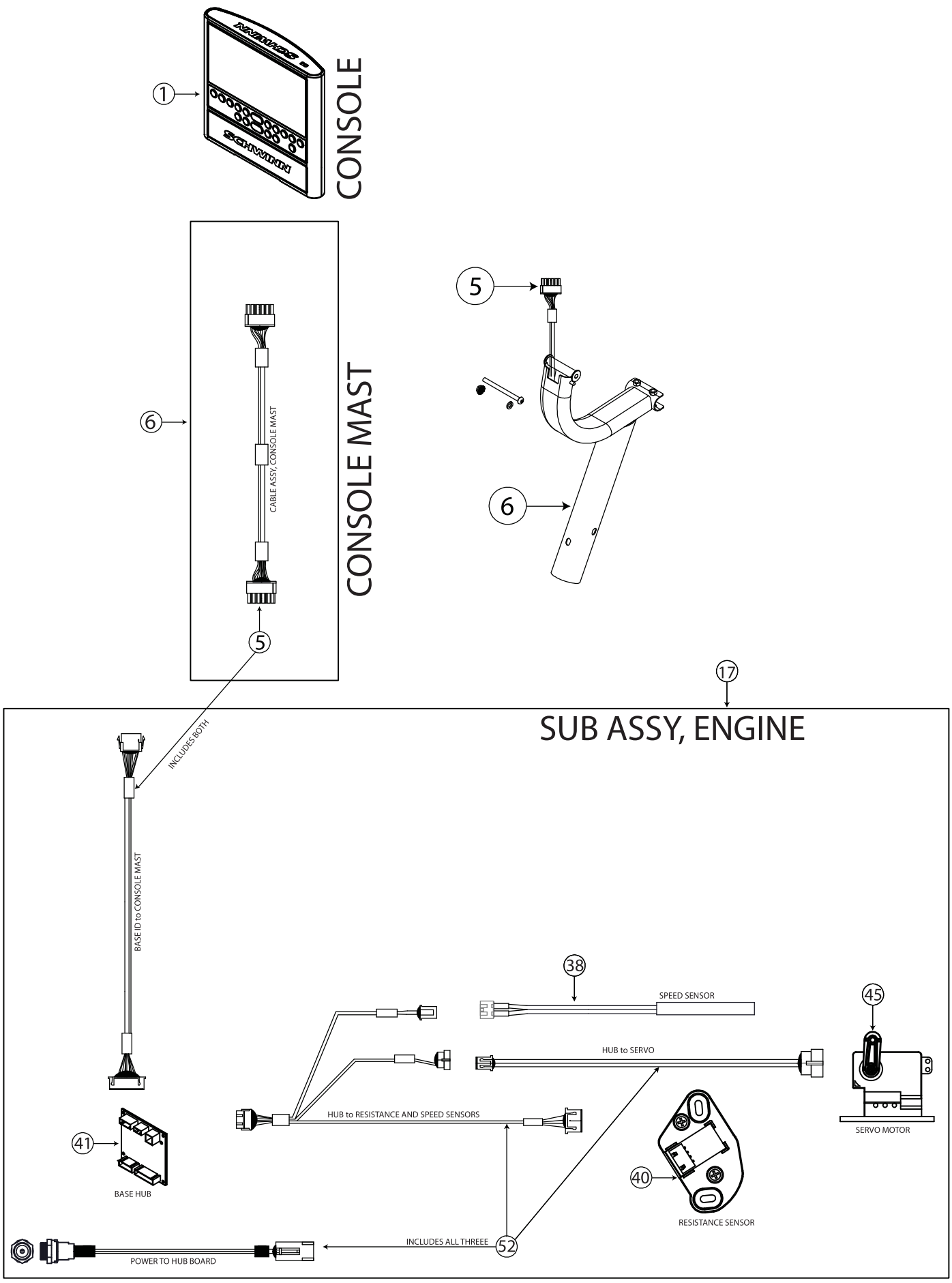
1
CONSOLE
6
CABLE ASSY, CONSOLE MAST
CONSOLE MAST
5
5
6
17
SUB ASSY, ENGINE
INCLUDES BOTH
BASE ID to CONSOLE MAST
38
SPEED SENSOR
45
HUB to SERVO
HUB to RESISTANCE AND SPEED SENSORS
SERVO MOTOR
41
BASE HUB
40
RESISTANCE SENSOR
INCLUDES ALL THREEE
52
POWER TO HUB BOARD